# NanoPC-4412

| | | |
|---|---|---|
| Title | Tiny4412SDK 1312 | |
| Size A3 | Document Number <Doc> | Rev <RevCod |
| Date: Thursday, January 02, 2014 | Sheet 1 of 20 | |

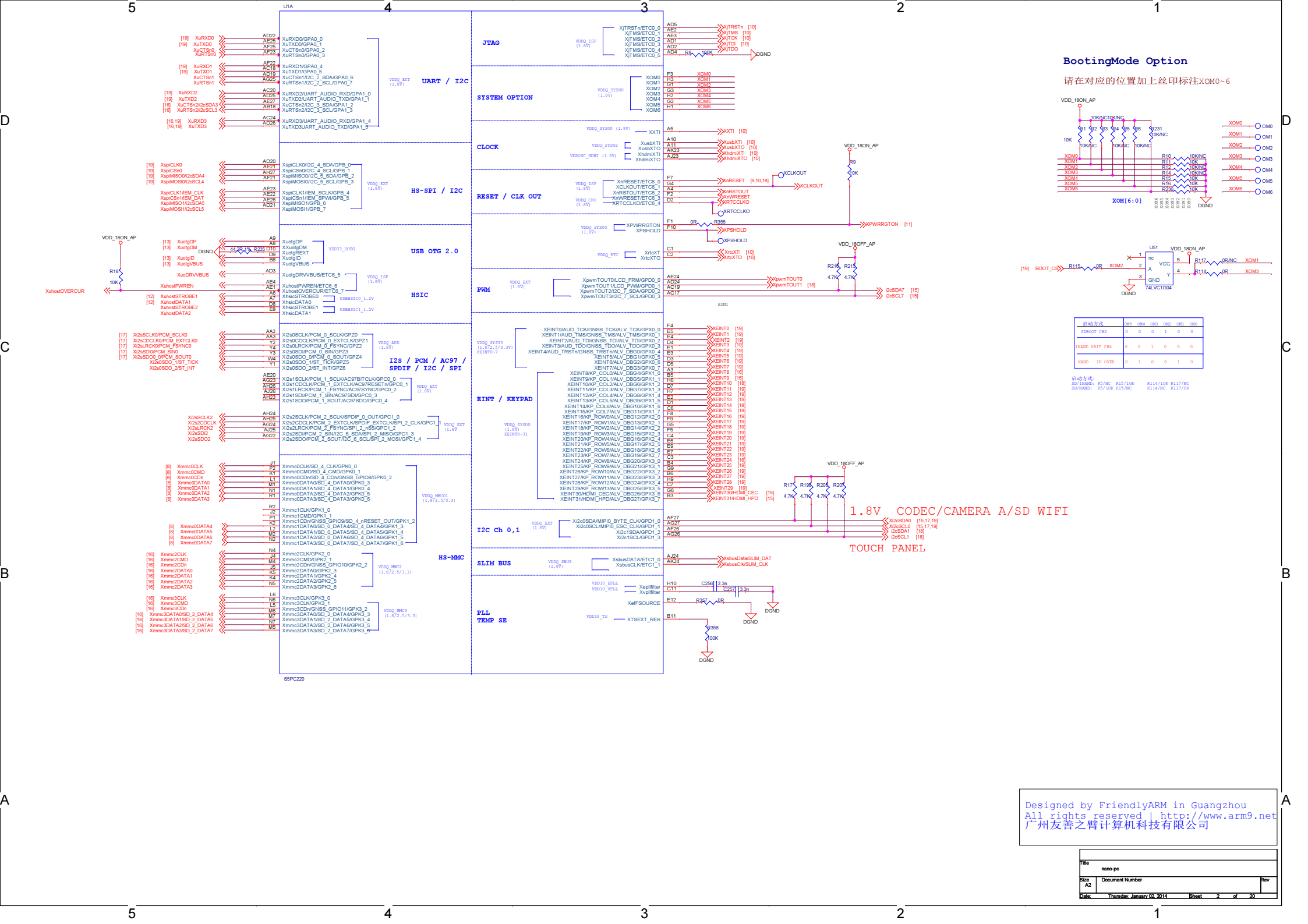


Designed by FriendlyARM in Guangzhou
All rights reserved | http://www.arm9.net
广州友善之臂计算机科技有限公司

| | | | |
|---|---|---|---|
| Title | nano-pc | | |
| Size A2 | Document Number | | Rev |
| Date: Thursday, January 02, 2014 | Sheet 2 | of 20 | |

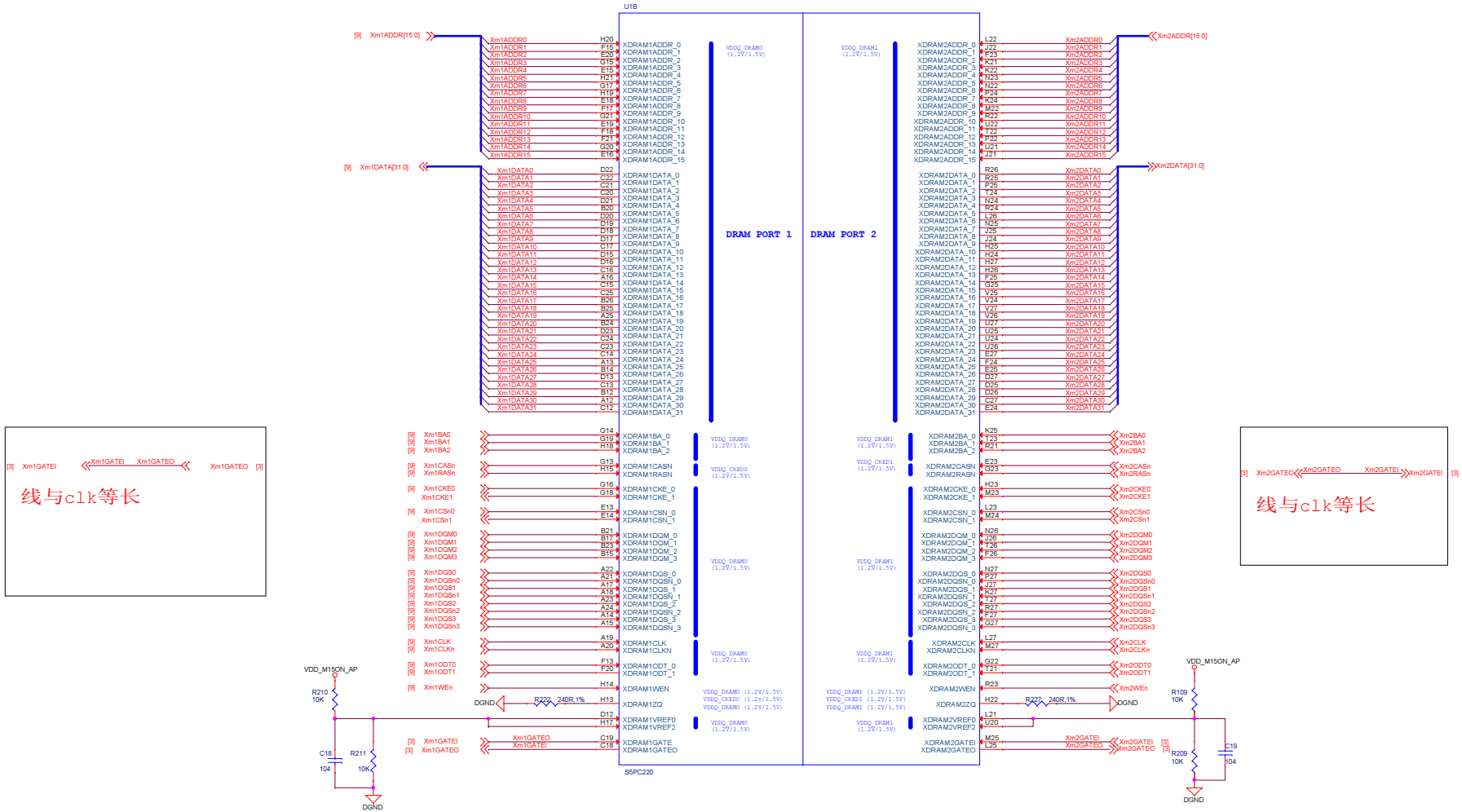


Designed by FriendlyARM in Guangzhou
All rights reserved | http://www.arm9.net
广州友善之臂计算机科技有限公司

| | | | |
|---|---|---|---|
| Title | nano-pc | | |
| Size A2 | Document Number | | Rev |
| Date: Thursday, January 02, 2014 | Sheet 3 | of 20 | |

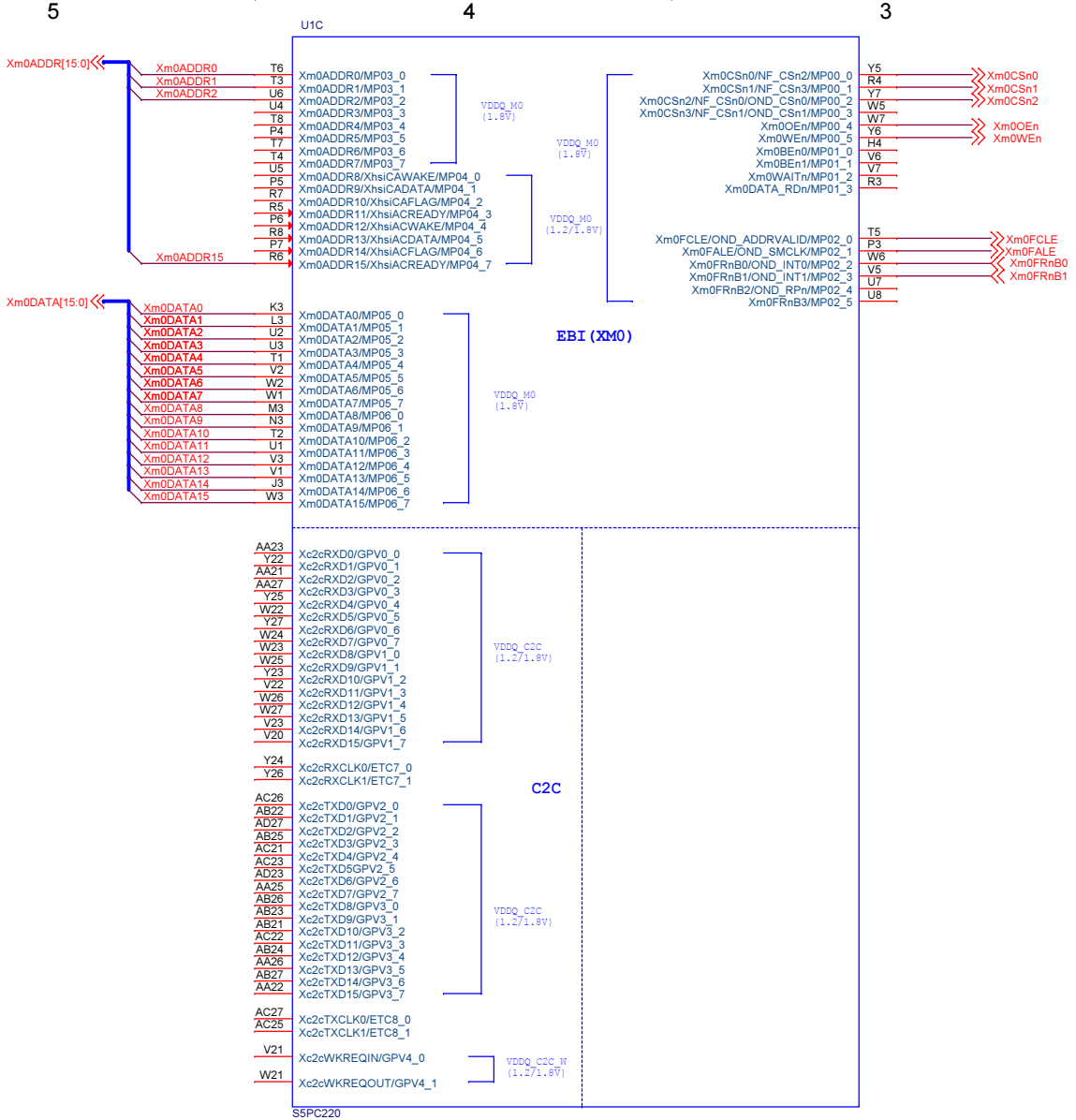


Designed by FriendlyARM in Guangzhou
All rights reserved | http://www.arm9.net
广州友善之臂计算机科技有限公司

| | | |
|---|---|---|
| Title | nano-pc | |
| Size A3 | Document Number <Doc> | Rev <RevCode> |
| Date: Thursday, January 02, 2014 | Sheet 4 of 20 | |

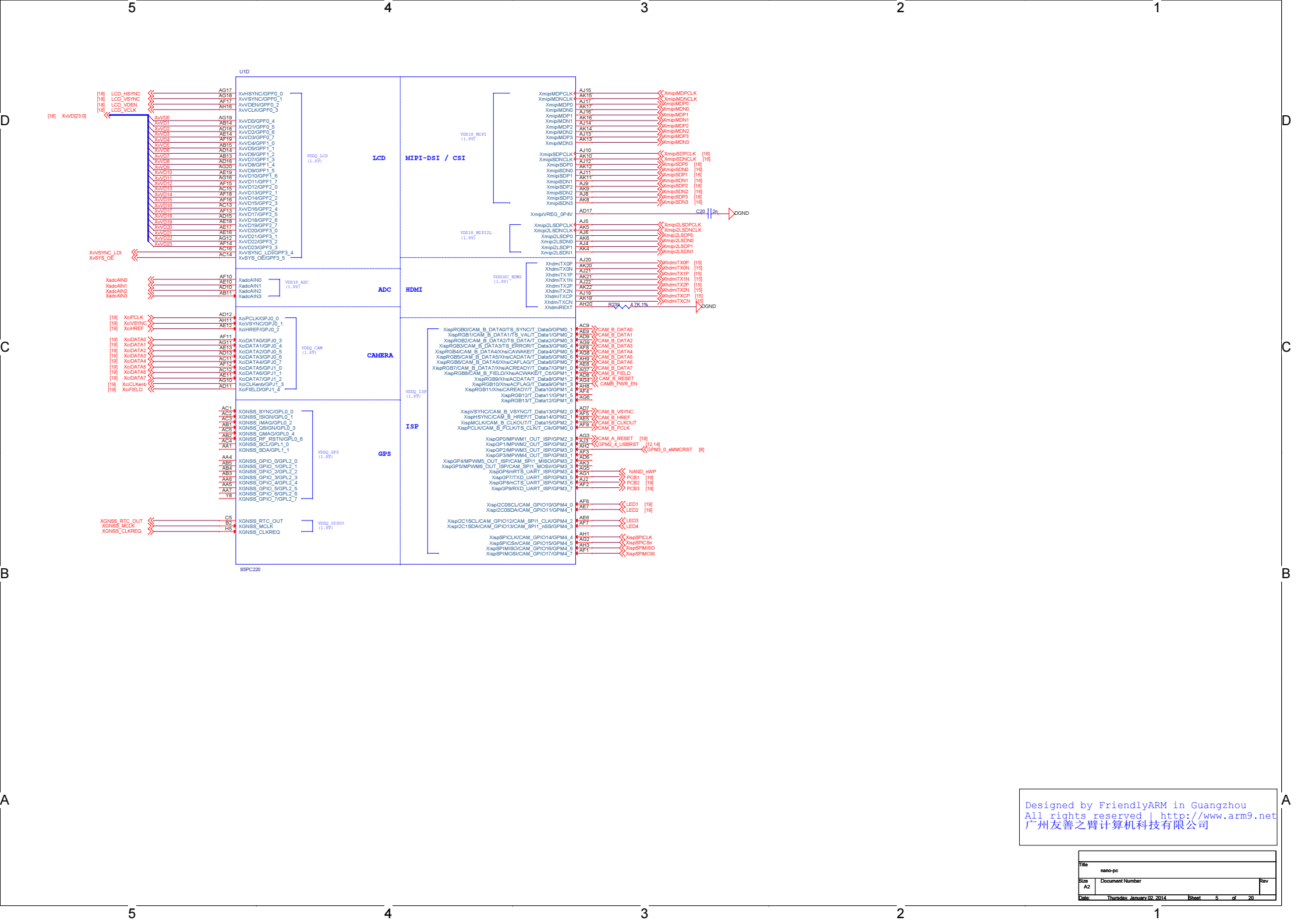


Designed by FriendlyARM in Guangzhou
All rights reserved | http://www.arm9.net
广州友善之臂计算机科技有限公司

| | | |
|---|---|---|
| Title | nano-pc | |
| Size A2 | Document Number | Rev |
| Date: Thursday, January 02, 2014 | Sheet 5 of 20 | |

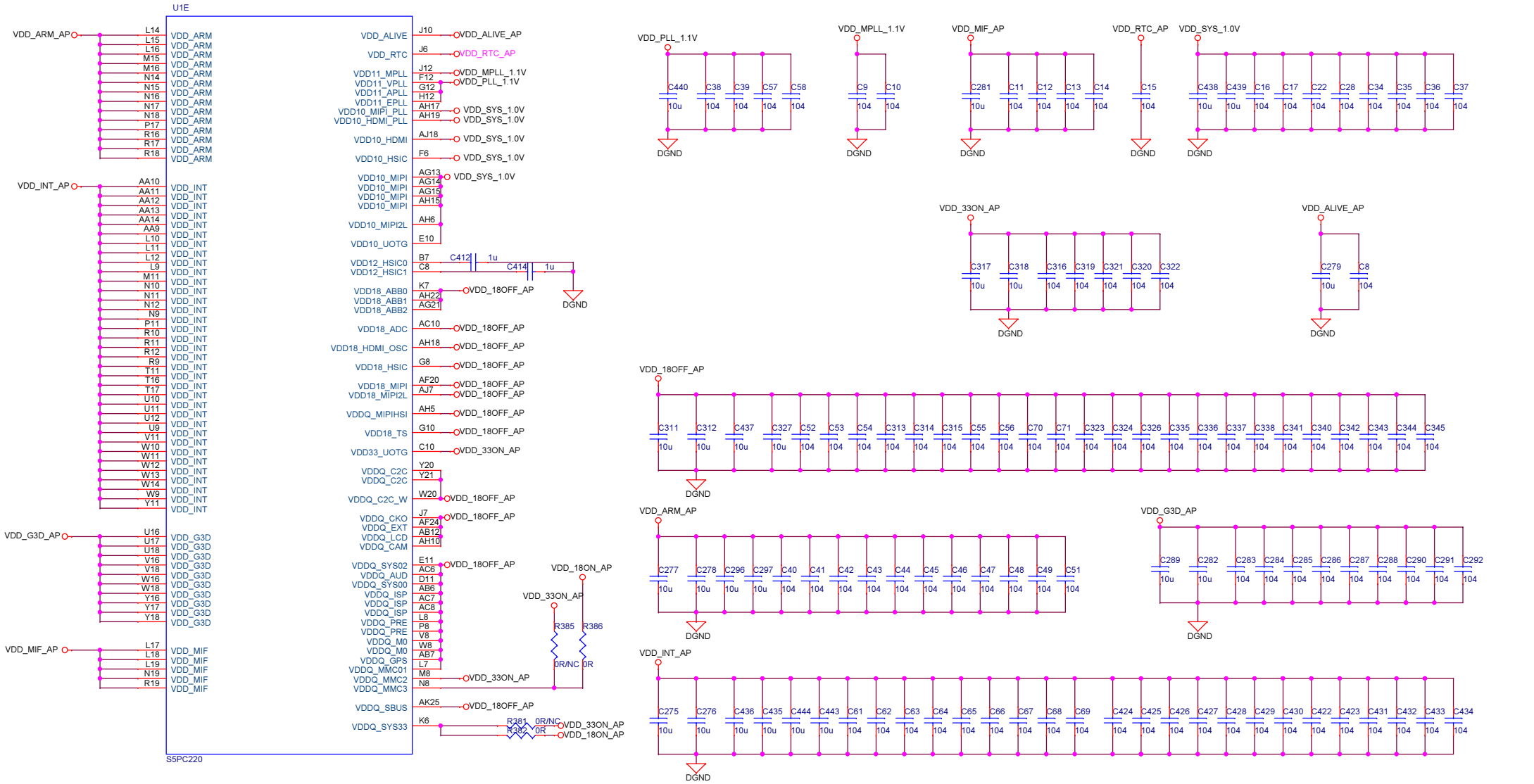


Designed by FriendlyARM in Guangzhou
All rights reserved | http://www.arm9.net
广州友善之臂计算机科技有限公司

| | | | |
|---|---|---|---|
| Title | nano-pc | | |
| Size A3 | Document Number | | Rev |
| Date: Thursday, January 02, 2014 | | Sheet 6 of 20 | |

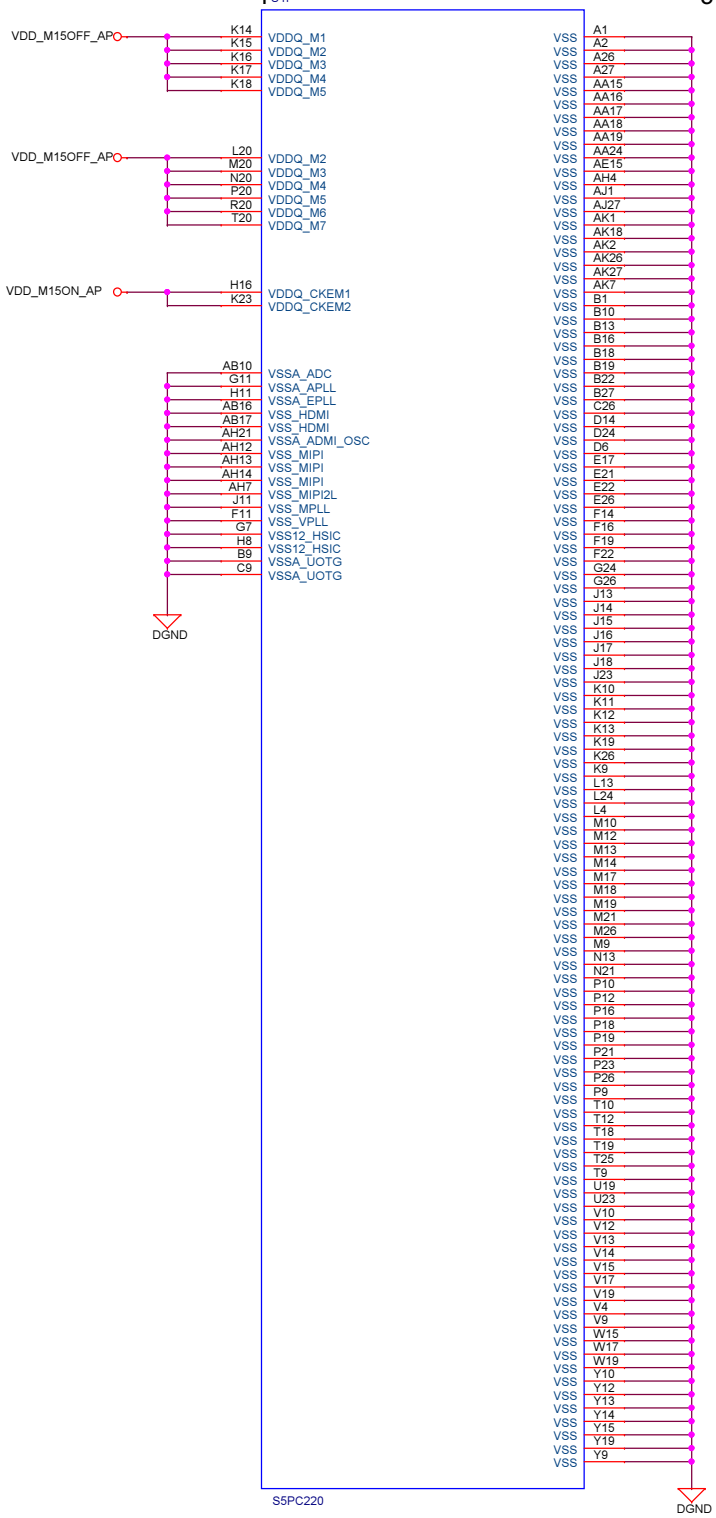


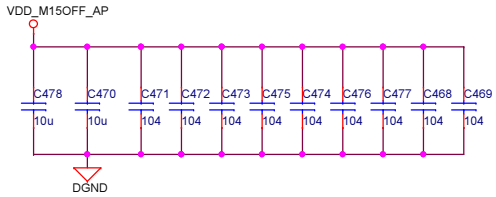


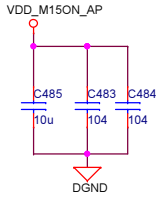


Designed by FriendlyARM in Guangzhou
All rights reserved | http://www.arm9.net
广州友善之臂计算机科技有限公司

| | | |
|---|---|---|
| Title | nano-pc | |
| Size A3 | Document Number <Doc> | Rev |
| Date: Thursday, January 02, 2014 | Sheet 7 of 20 | |

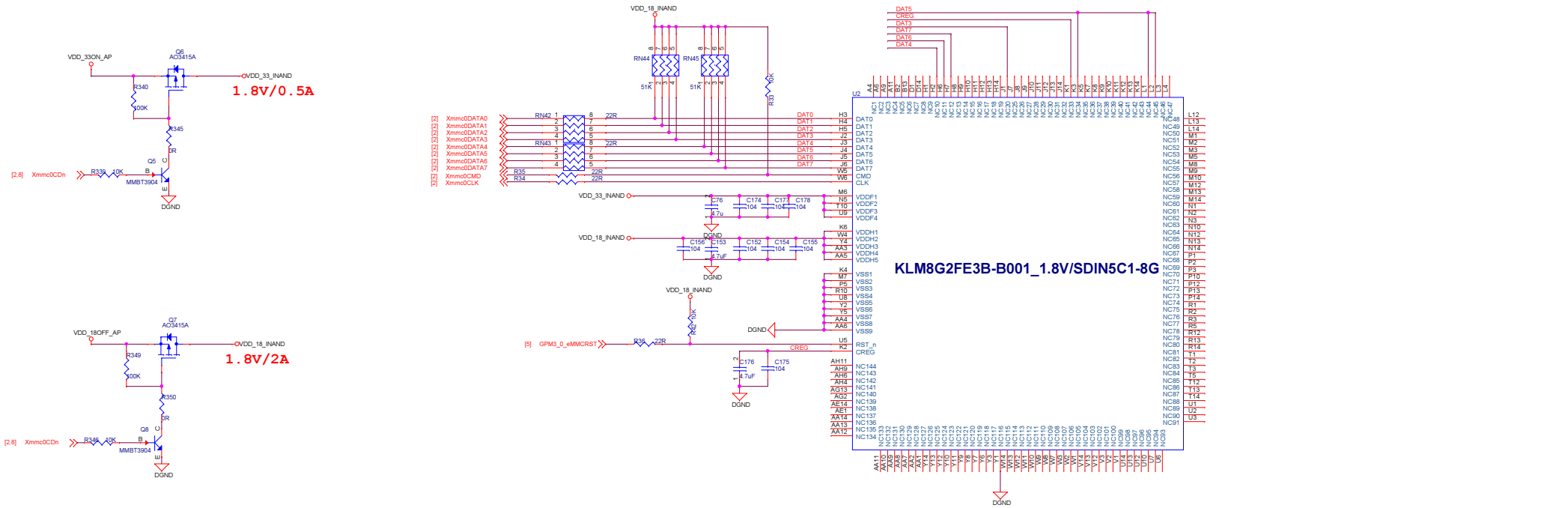


Designed by FriendlyARM in Guangzhou
All rights reserved | http://www.arm9.net
广州友善之臂计算机科技有限公司

| | | |
|---|---|---|
| Title | nano-pc | |
| Size A2 | Document Number <Doc> | Rev |
| Date: Thursday, January 02, 2014 | Sheet 8 of 20 | |

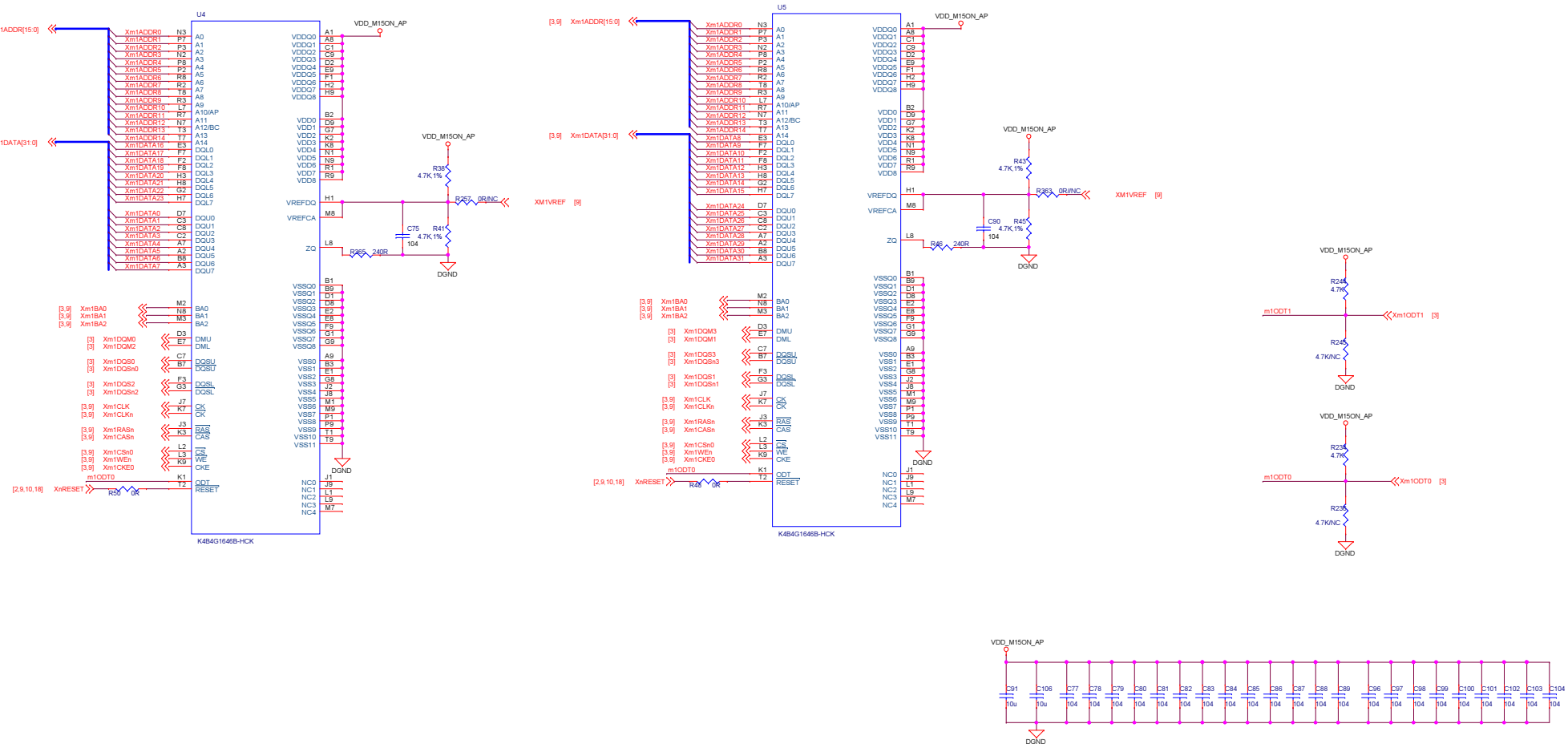


Designed by FriendlyARM in Guangzhou
All rights reserved | http://www.arm9.net
广州友善之臂计算机科技有限公司

| | | |
|---|---|---|
| Title | nano-pc | |
| Size A2 | Document Number Memory(mDDR) | Rev |
| Date: Thursday, January 02, 2014 | Sheet 9 of 20 | |

## 复位电路

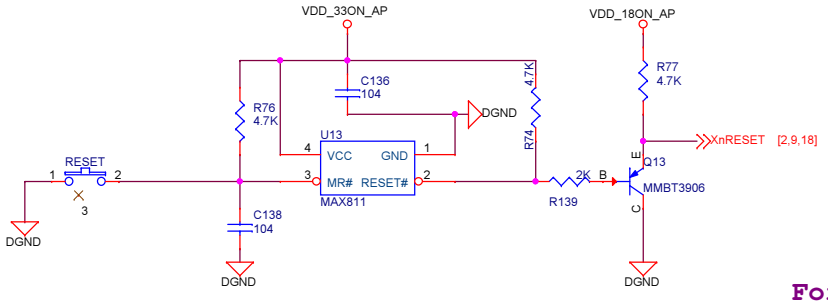


## For PLL

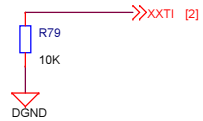


## For USB HOST

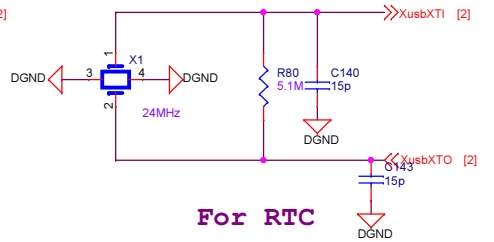


## JTAG电路

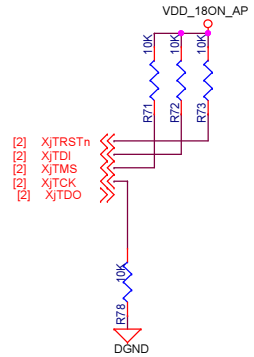


## For VEDIO

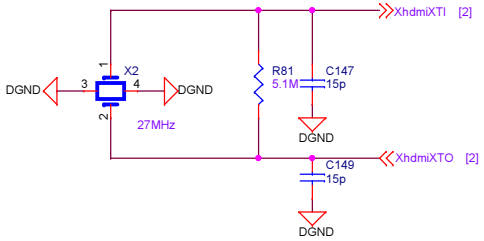


## For RTC

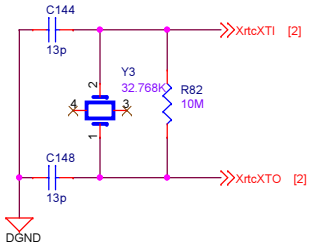


Designed by FriendlyARM in Guangzhou
All rights reserved | http://www.arm9.net
广州友善之臂计算机科技有限公司

| | | |
|---|---|---|
| Title: nano-pc | | |
| Size: A3 | Document Number | Rev |
| Date: Thursday, January 02, 2014 | Sheet 10 of 20 | |

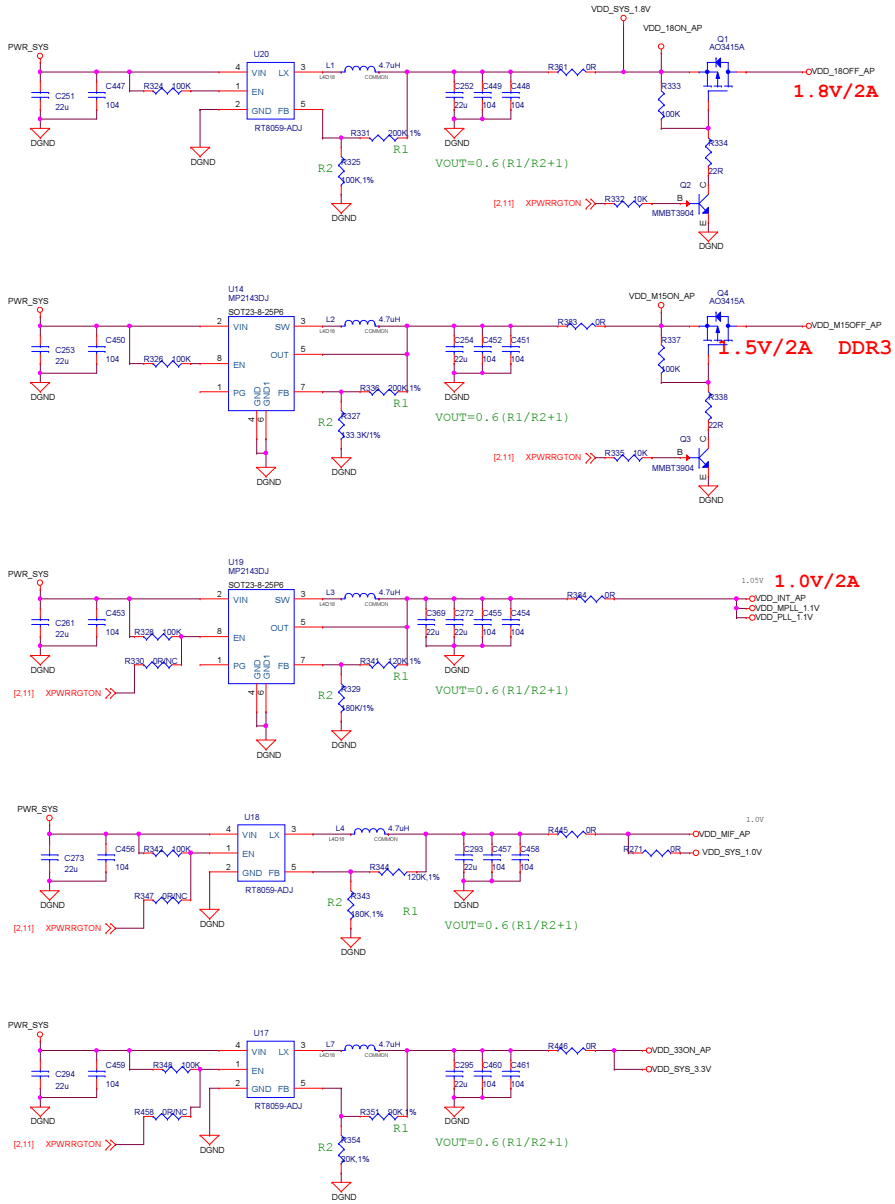


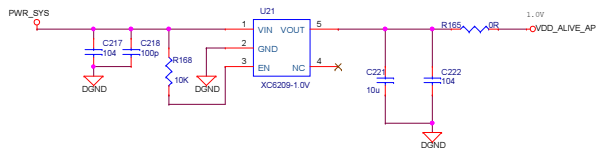


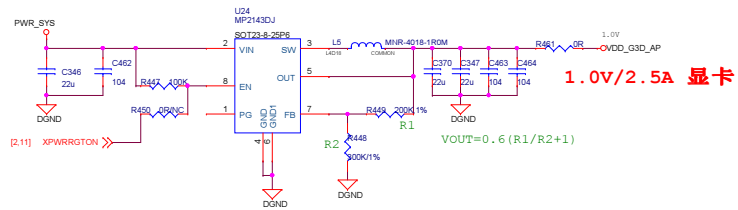


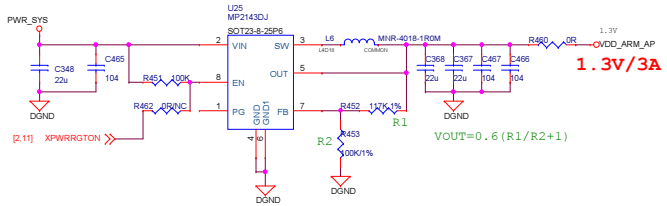


Designed by FriendlyARM in Guangzhou
All rights reserved | http://www.arm9.net
广州友善之臂计算机科技有限公司

| | | | |
|---|---|---|---|
| Title | nano-pc | | |
| Size A2 | Document Number | | Rev |
| Date: Thursday, January 02, 2014 | Sheet 11 of 20 | | |

# HSIC 1

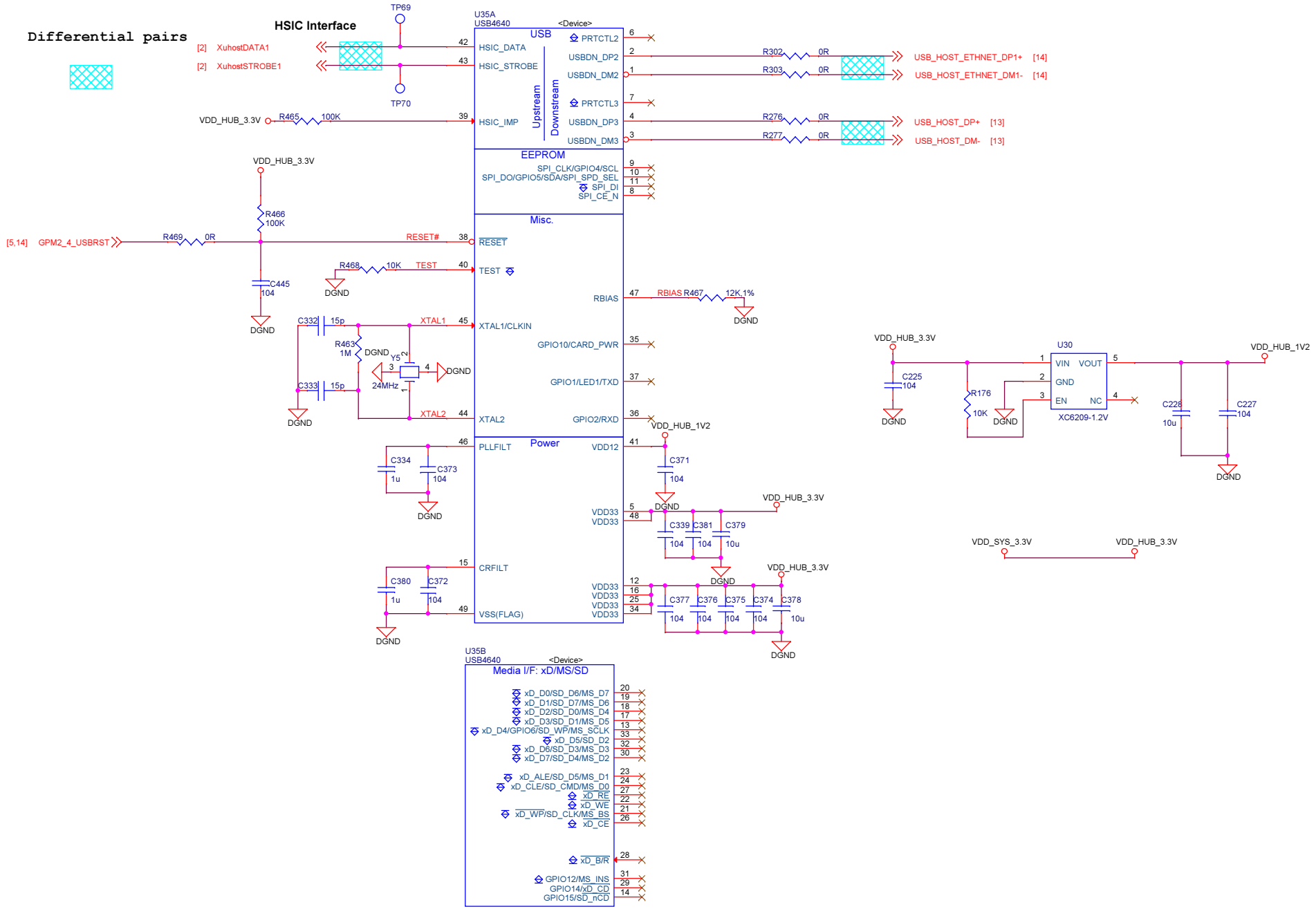


| | | |
|---|---|---|
| Title | Tiny4412SDK 1312 | |
| Size A3 | Document Number <Doc> | Rev <RevCod |
| Date: Thursday, January 02, 2014 | Sheet 12 of 20 | |

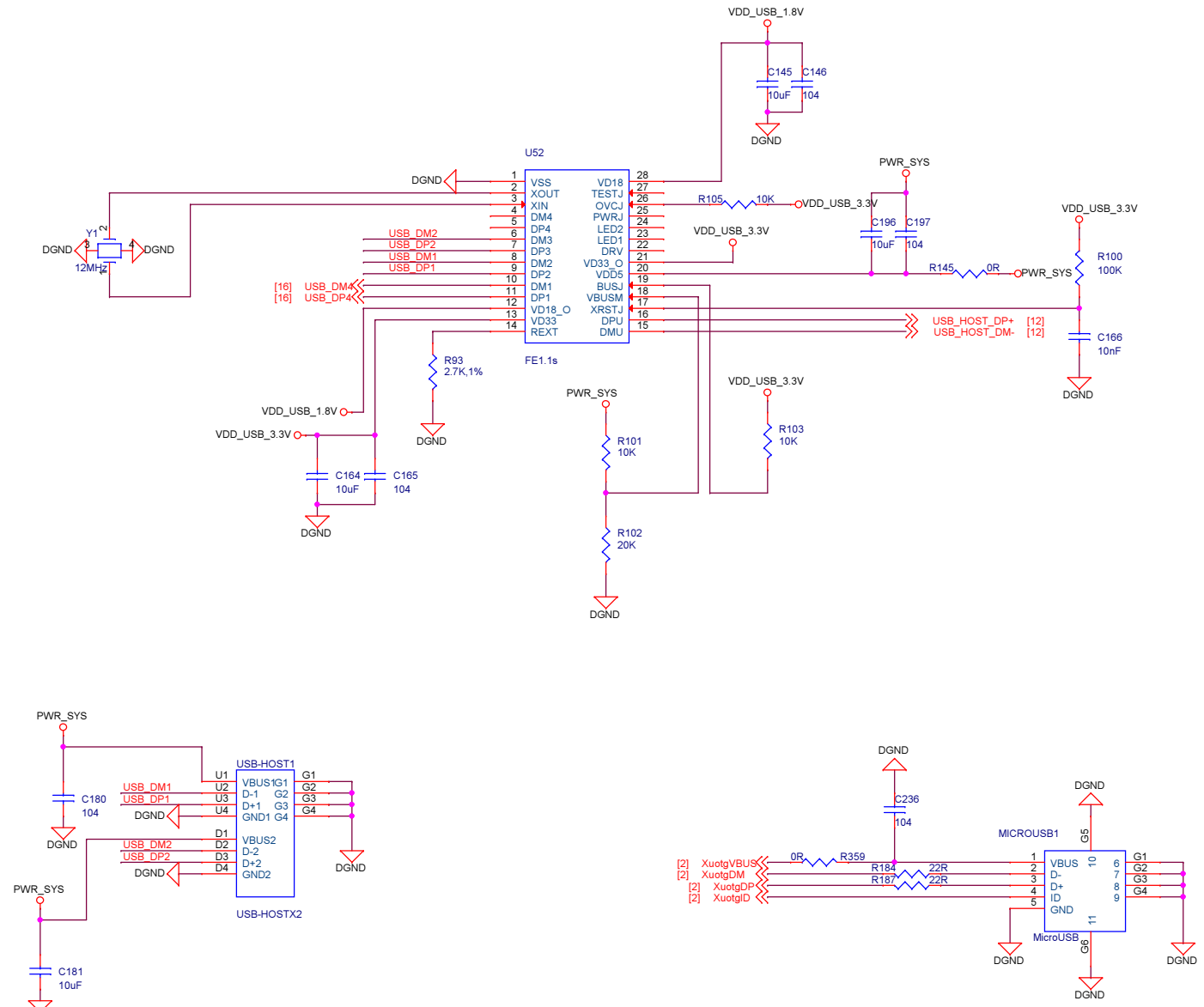


| | | |
|---|---|---|
| Title | nano-pc | |
| Size A3 | Document Number <Doc> | Rev <RevCod |
| Date: Thursday, January 02, 2014 | Sheet 13 of 20 | |

# USB ETHNET

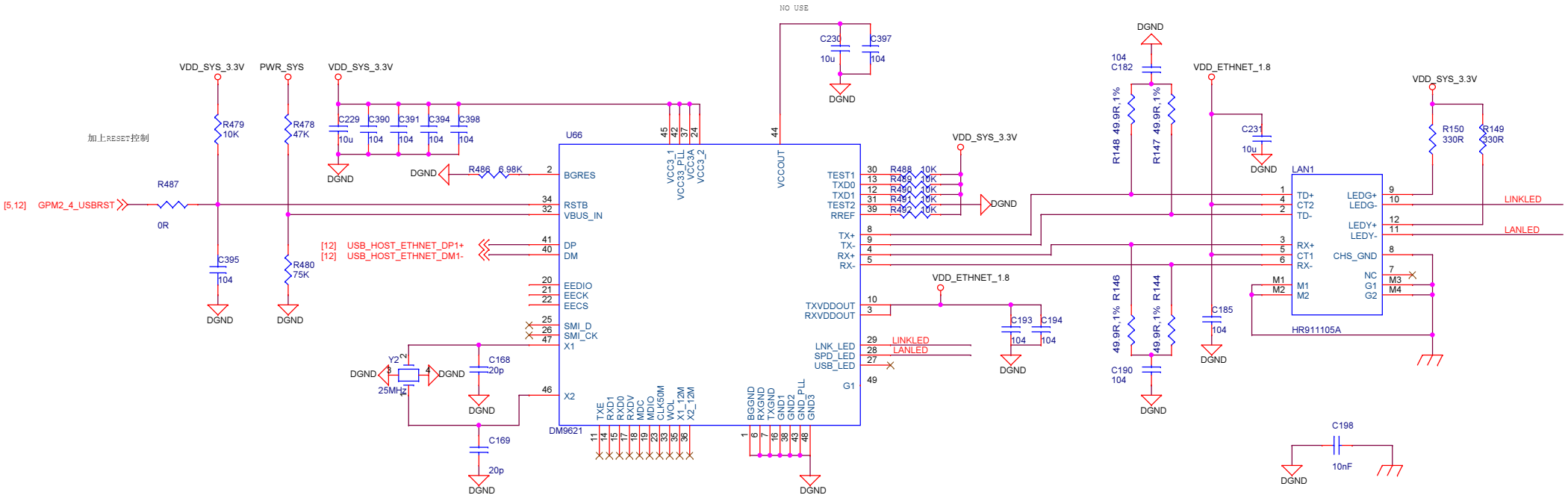


| | | |
|---|---|---|
| Title | nano-pc | |
| Size A3 | Document Number <Doc> | Rev <RevCod |
| Date: Thursday, January 02, 2014 | Sheet 14 of 20 | |

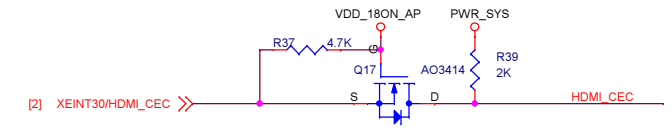


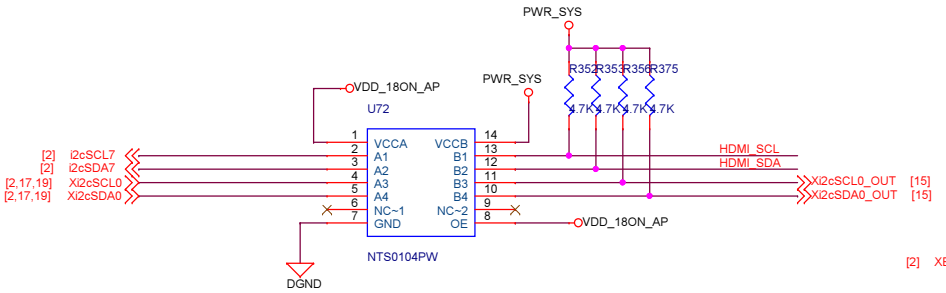


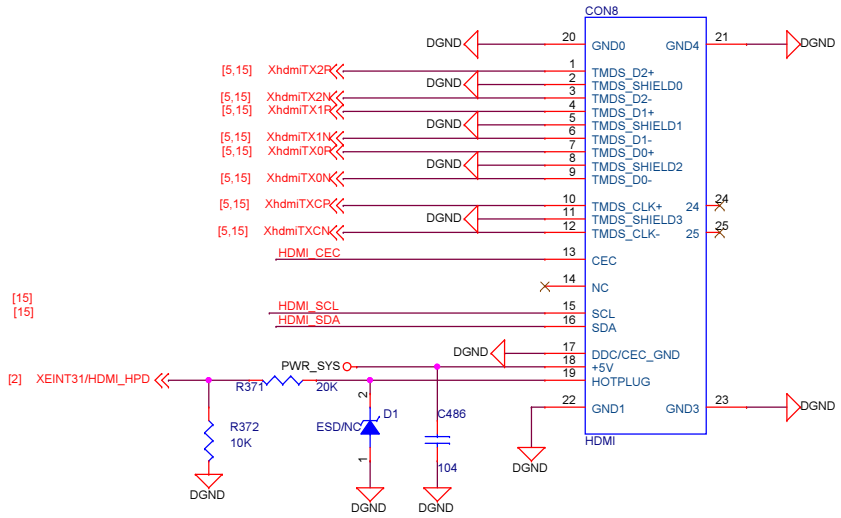


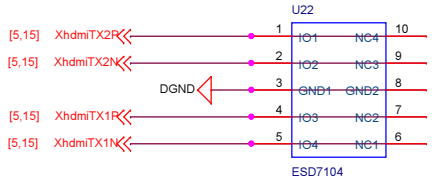


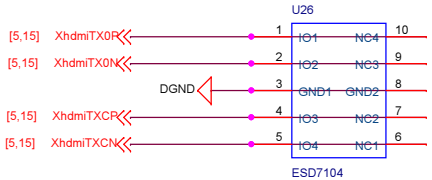


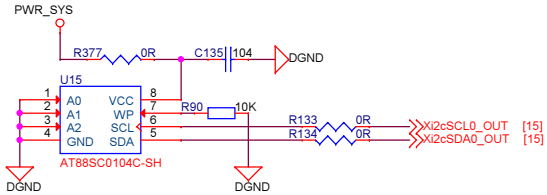


| | | |
|---|---|---|
| Title: nano-pc | | |
| Size: A3 | Document Number: <Doc> | Rev: <RevCod |
| Date: Thursday, January 02, 2014 | Sheet 15 of 20 | |

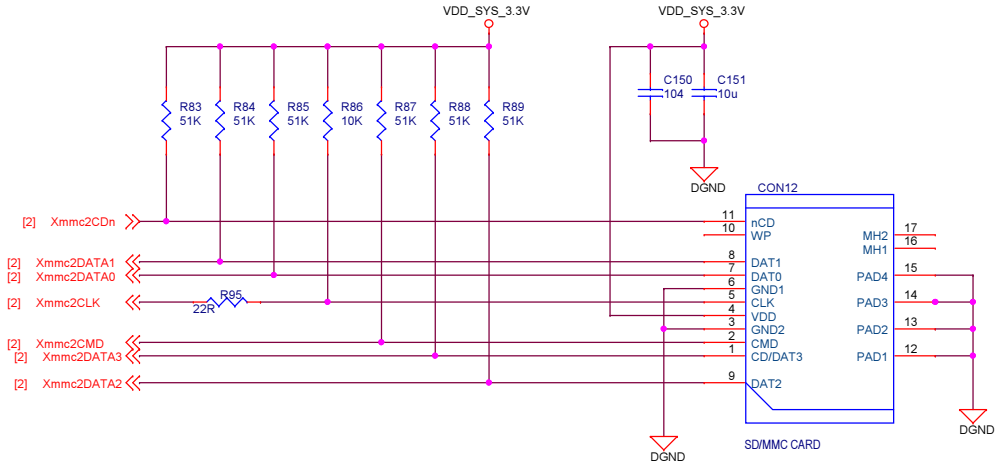


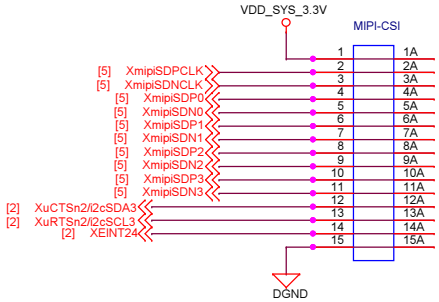


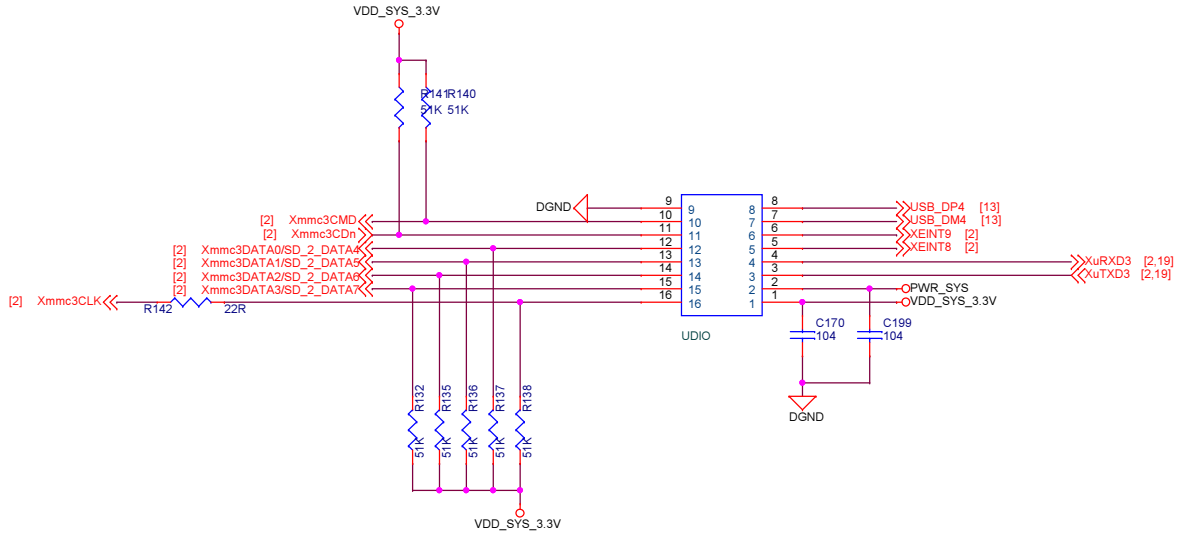


| | | |
|---|---|---|
| Title | nano-pc | |
| Size A3 | Document Number <Doc> | Rev <RevCod |
| Date: Thursday, January 02, 2014 | Sheet 16 of 20 | |

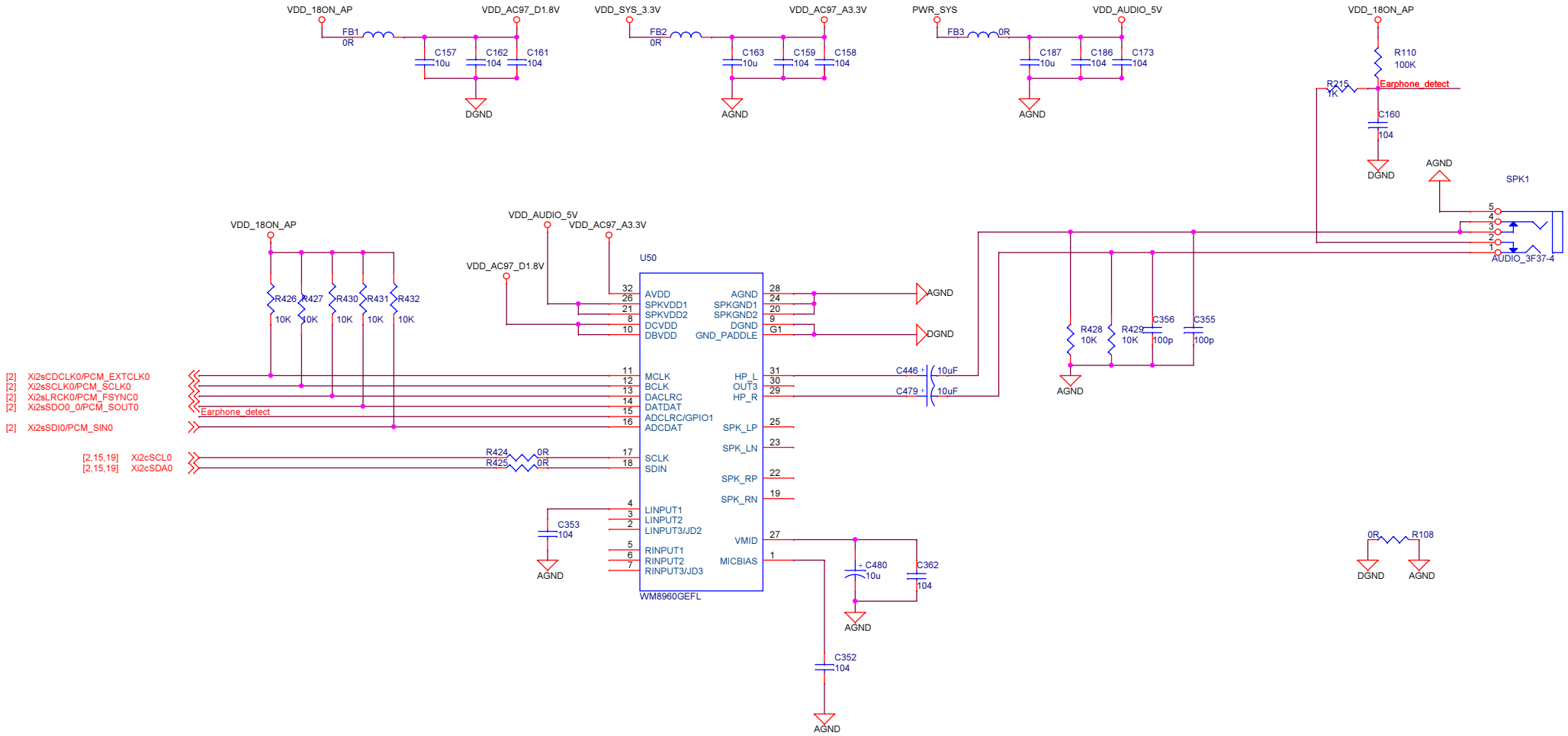


| | | |
|---|---|---|
| Title | nano-pc | |
| Size A3 | Document Number <Doc> | Rev <RevCod |
| Date: Thursday, January 02, 2014 | Sheet 17 of 20 | |

# LCD-Interface

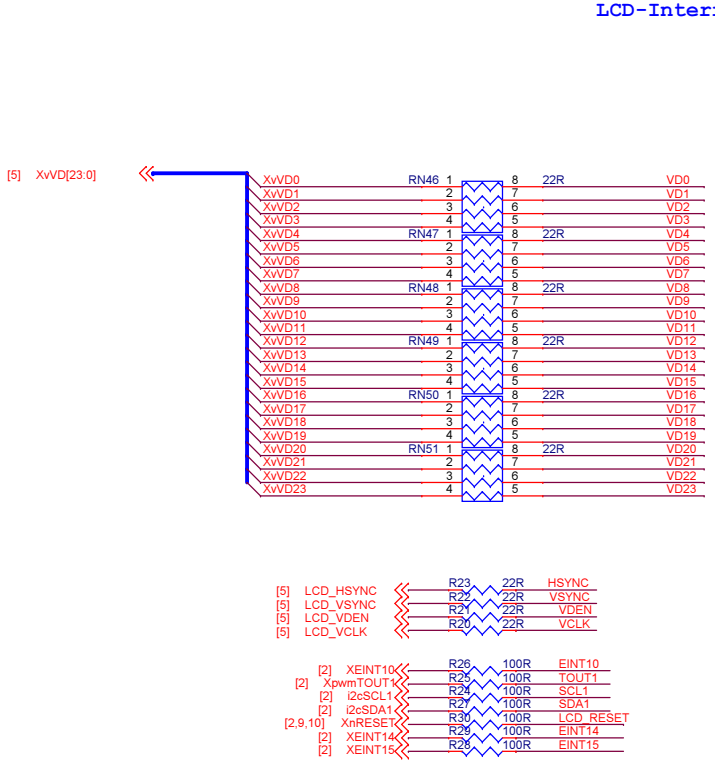


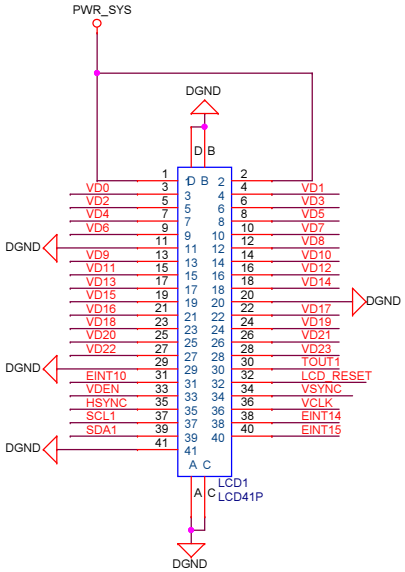


| | | |
|---|---|---|
| Title | Nano2416,Designed by FriendlyARM in Guangzhou | |
| Size A3 | Document Number <Doc> | Rev <RevCod |
| Date: Thursday, January 02, 2014 | Sheet 18 of 20 | |

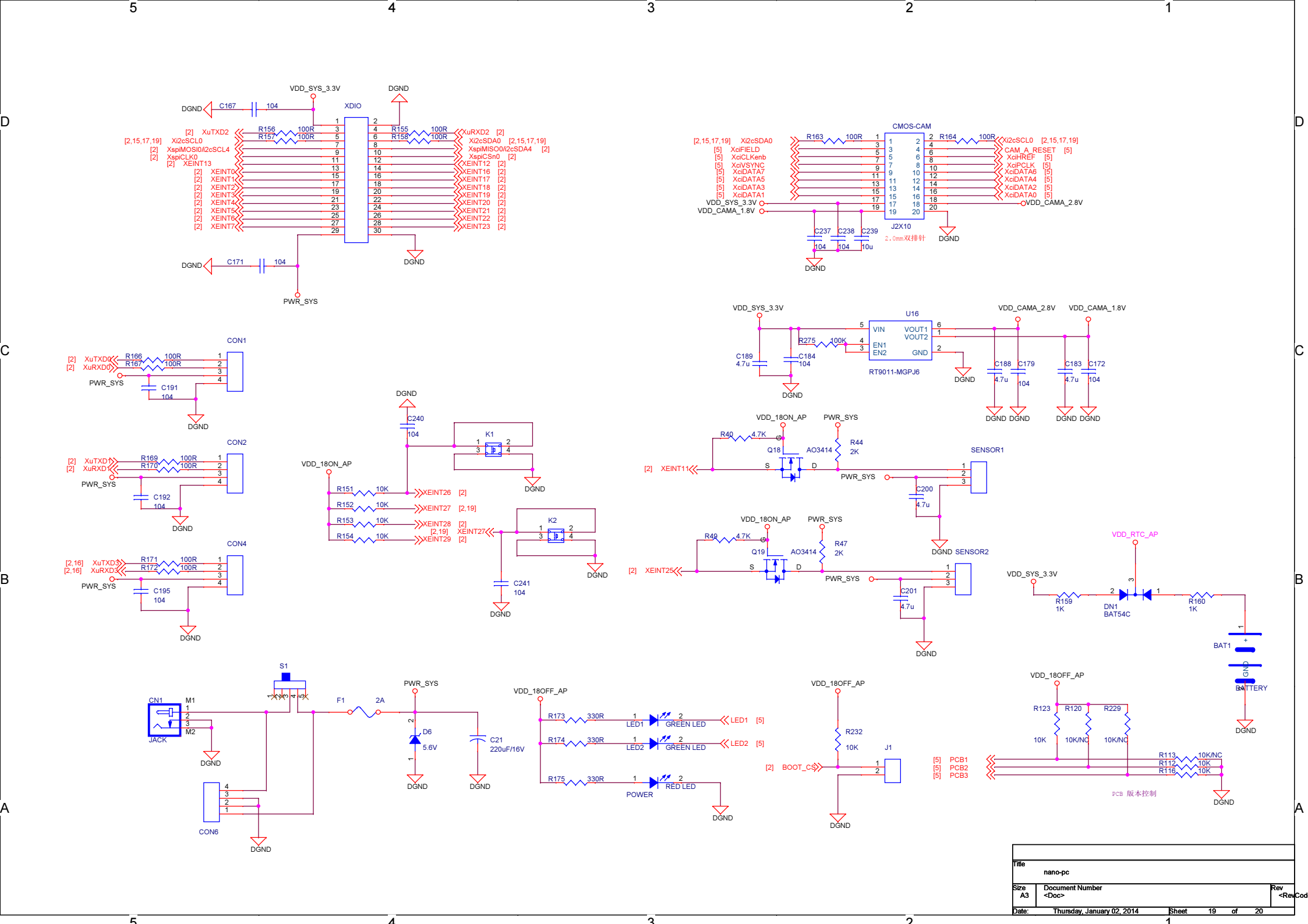

XDIO
VDD_SYS_3.3V
DGND
C167 104
C171 104
PWR_SYS
[2] XuTXD2
[2,15,17,19] Xi2cSCL0
[2] XspiMOSI0/i2cSCL4
[2] XspiCLK0
[2] XEINT13
[2] XEINT0
[2] XEINT1
[2] XEINT2
[2] XEINT3
[2] XEINT4
[2] XEINT5
[2] XEINT6
[2] XEINT7
R156 100R
R157 100R
R155 100R
R158 100R
XuRXD2 [2]
Xi2cSDA0 [2,15,17,19]
XspiMISO0/i2cSDA4 [2]
XspiCSn0 [2]
XEINT12 [2]
XEINT16 [2]
XEINT17 [2]
XEINT18 [2]
XEINT19 [2]
XEINT20 [2]
XEINT21 [2]
XEINT22 [2]
XEINT23 [2]
CMOS-CAM
J2X10
2.0mm双排针
[2,15,17,19] Xi2cSDA0
[5] XciFIELD
[5] XciCLKenb
[5] XciVSYNC
[5] XciDATA7
[5] XciDATA5
[5] XciDATA3
[5] XciDATA1
R163 100R
R164 100R
Xi2cSCL0 [2,15,17,19]
CAM_A_RESET [5]
XciHREF [5]
XciPCLK [5]
XciDATA6 [5]
XciDATA4 [5]
XciDATA2 [5]
XciDATA0 [5]
VDD_SYS_3.3V
VDD_CAMA_1.8V
VDD_CAMA_2.8V
C237 104
C238 104
C239 10u
U16
RT9011-MGPJ6
VIN
VOUT1
VOUT2
EN1
EN2
GND
R275 100K
C189 4.7u
C184 104
C188 4.7u
C179 104
C183 4.7u
C172 104
CON1
[2] XuTXD0
[2] XuRXD0
R166 100R
R167 100R
C191 104
CON2
[2] XuTXD1
[2] XuRXD1
R169 100R
R170 100R
C192 104
CON4
[2,16] XuTXD3
[2,16] XuRXD3
R171 100R
R172 100R
C195 104
C240 104
K1
K2
VDD_18ON_AP
R151 10K
R152 10K
R153 10K
R154 10K
XEINT26 [2]
XEINT27 [2,19]
XEINT28 [2]
[2,19] XEINT27
XEINT29 [2]
C241 104
R40 4.7K
Q18
AO3414
R44 2K
[2] XEINT11
SENSOR1
C200 4.7u
R49 4.7K
Q19
AO3414
R47 2K
[2] XEINT25
SENSOR2
C201 4.7u
VDD_RTC_AP
R159 1K
DN1 BAT54C
R160 1K
BAT1
BATTERY
S1
CN1
M1
M2
JACK
F1 2A
D6 5.6V
C21 220uF/16V
CON6
VDD_18OFF_AP
R173 330R
R174 330R
R175 330R
LED1
LED2
GREEN LED
RED LED
POWER
R232 10K
J1
[2] BOOT_CS
R123 10K
R120 10K/NC
R229 10K/NC
[5] PCB1
[5] PCB2
[5] PCB3
R113 10K/NC
R112 10K
R116 10K
PCB 版本控制
Title
nano-pc
Size A3
Document Number <Doc>
Rev <RevCod
Date: Thursday, January 02, 2014
Sheet 19 of 20

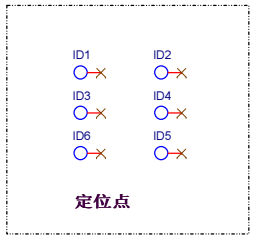


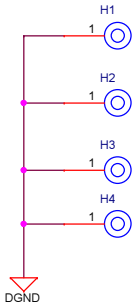


| | | |
|---|---|---|
| Title | nano-pc | |
| Size A3 | Document Number ID Mark/Fixed Hold | Rev |
| Date: Thursday, January 02, 2014 | Sheet 20 of 20 | |